淄博圣诺

3N60 3N65

Power MOSFET

3 Amps, 600/650 Volts
N-CHANNEL POWER MOSFET

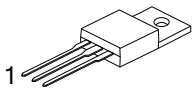

TO-220

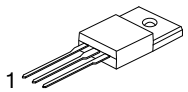

ITO-220/TO-220F

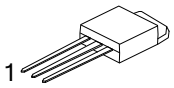

TO-251/IPAK

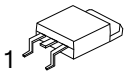

TO-252/DPAK

■ DESCRIPTION

3N60 3N65 is a high voltage and high current power MOSFET , designed to have better characteristics, such as fast switching time, low gate charge, low on-state resistance and have a high rugged avalanche characteristics. This power MOSFET is usually used at high speed switching applications in power supplies, PWM motor controls, high efficient DC to DC converters and bridge circuits.

■ FEATURES

* $R_{DS(ON)}$ = 3.6Ω @V_{GS} = 10 V
* Ultra low gate charge (typical 10 nC)
* Low reverse transfer capacitance (C_{RSS} = typical 5.5 pF)
* Fast switching capability
* Avalanche energy specified
* Improved dv/dt capability, high ruggedness

■ SYMBOL

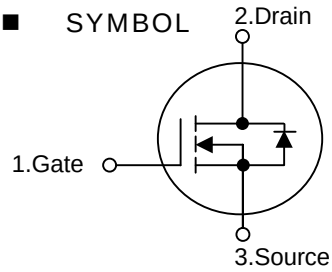

■ ORDERING INFORMATION

Ordering Number	Package	Pin Assignment		
		1	2	3
3N60	TO-220	G	D	S
	ITO-220/TO-220F	G	D	S
3N65	TO-251/IPAK	G	D	S
	TO-252/DPAK	G	D	S

Note: Pin Assignment: G: Gate D: Drain S: Source

Part No.	Package	Packing
3N60-TU	TO-251	75pcs / Tube
3N60-TR	TO-252	2.5Kpcs / 13” Reel
3N60-TU	TO-252	75pcs / Tube
3N60-TU	TO-220	50pcs / Tube
3N60-TU	ITO-220/TO-220F	50pcs / Tube
3N60-TU	TO-262	50pcs / Tube
3N60-TU	TO-263	50pcs / Tube
3N60-TR	TO-263	800pcs / 13" Reel

淄博圣诺

3N60 3N65

Power MOSFET

■ ABSOLUTE MAXIMUM RATINGS (T_C = 25°C, unless otherwise specified)

PARAMETER			SYMBOL	RATINGS	UNIT
Drain-Source Voltage		3N60	V_{DSS}	600	V
		3N65		650	V
Gate-Source Voltage			V_{GSS}	±30	V
Avalanche Current (Note 2)			I_{AR}	3.0	A
Drain Current	Continuous		I_D	3.0	A
	Pulsed (Note 2)		I_{DM}	12	A
Avalanche Energy	Single Pulsed (Note 3)		E_{AS}	200	mJ
	Repetitive (Note 2)		E_{AR}	7.5	mJ
Peak Diode Recovery dv/dt (Note 4)			dv/dt	4.5	V/ns
Power Dissipation	TO-220		P_D (T_C = 25°C)	75	W
	TO-220F			34	W
	TO-251/IPAK			50	W
	TO-252/DPAK			50	W
Junction Temperature			T_J	+150	°C
Ambient Operating Temperature			T_{OPR}	-55 ~ +150	°C
Storage Temperature			T_{STG}	-55 ~ +150	°C

Notes: 1. Absolute maximum ratings are those values beyond which the device could be permanently damaged. Absolute maximum ratings are stress ratings only and functional device operation is not implied.

2. Repetitive Rating : Pulse width limited by T_J
3. L=64mH, I_{AS}=3.0A, V_{DD}=50V, R_G=25 Ω, Starting T_J = 25°C
4. I_{SD}≤3.0A, di/dt≤200A/μs, V_{DD} ≤ BV_{DSS}, Starting T_J = 25°C

■ THERMAL DATA

PARAMETER		SYMBOL	RATINGS	UNIT
Junction-to-Ambient	TO-251/IPAK	θ_{JA}	110	℃/W
	TO-252/DPAK		110	
	TO-220		62.5	
	TO-220F		62.5	
Junction-to-Case	TO-251/IPAK	θ_{Jc}	2.50	℃/W
	TO-252/DPAK		2.50	
	TO-220		1.67	
	TO-220F		3.68	

■ ELECTRICAL CHARACTERISTICS (T_J=25°C, unless otherwise specified)

PARAMETER		SYMBOL	TEST CONDITIONS	MIN	TYP	MAX	UNIT
OFF CHARACTERISTICS							
Drain-Source Breakdown Voltage	3N60	BV_{DSS}	V_{GS} = 0V, I_D = 250μA	600			V
	3N65			650			V
Drain-Source Leakage Current		I_{DSS}	V_{DS} = 600V, V_{GS} = 0V			10	μA
Gate-Source Leakage Current	Forward	I_{GSS}	V_{GS} = 30V, V_{DS} = 0V			100	nA
	Reverse		V_{GS} = -30V, V_{DS} = 0V			-100	nA
Breakdown Voltage Temperature Coefficient		$\triangle BV_{DSS}/\triangle T_J$	I_D = 250 μA, Referenced to 25°C		0.6		V/°C
ON CHARACTERISTICS							
Gate Threshold Voltage		$V_{GS(TH)}$	V_{DS} = V_{GS}, I_D = 250μA	2.0		4.0	V
Static Drain-Source On-State Resistance		$R_{DS(ON)}$	V_{GS} = 10V, I_D =1.5A		2.8	3.6	Ω
DYNAMIC CHARACTERISTICS							
Input Capacitance		C_{ISS}	V_{DS} =25V, V_{GS} =0V,f =1MHz		350	450	pF
Output Capacitance		C_{OSS}			50	65	pF
Reverse Transfer Capacitance		C_{RSS}			5.5	7.5	pF
SWITCHING CHARACTERISTICS							
Turn-On Delay Time		$t_{D\ (ON)}$	V_{DD} =30V, I_D =3.0A, R_G=25Ω (Note 1, 2)		35	50	ns
Turn-On Rise Time		t_R			60	70	ns
Turn-Off Delay Time		$t_{D(OFF)}$			100	150	ns
Turn-Off Fall Time		t_F			65	75	ns
Total Gate Charge		Q_G	V_{DS}=50V, V_{GS}=10V, I_D=3.0A (Note 1, 2)		18.5	23	nC
Gate-Source Charge		Q_{GS}			5.2		nC
Gate-Drain Charge		Q_{GD}			4.9		nC
DRAIN-SOURCE DIODE CHARACTERISTICS							
Drain-Source Diode Forward Voltage		V_{SD}	V_{GS} = 0 V, I_{SD} = 3.0 A			1.4	V
Continuous Drain-Source Current		I_{SD}				3.0	A
Pulsed Drain-Source Current		I_{SM}				12	A
Reverse Recovery Time		t_{RR}	V_{GS} = 0 V, I_{SD} = 3.0A, di/dt = 100 A/μs (Note1)		210		ns
Reverse Recovery Charge		Q_{RR}			1.2		μC

Notes: 1. Pulse Test: Pulse width ≤ 300μs, Duty cycle≤2%
2. Essentially independent of operating temperature

■ TEST CIRCUITS AND WAVEFORMS

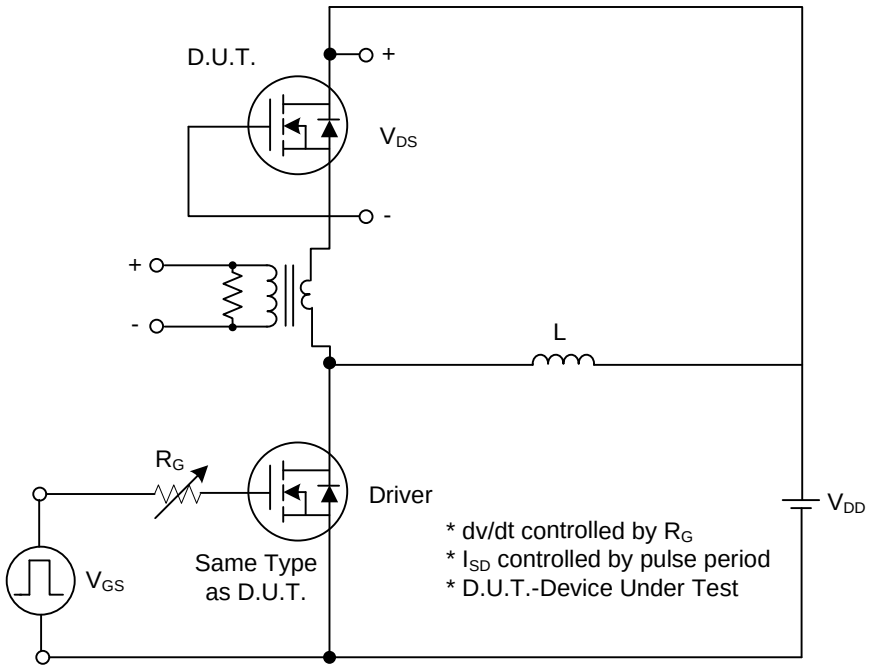

Fig. 1A Peak Diode Recovery dv/dt Test Circuit

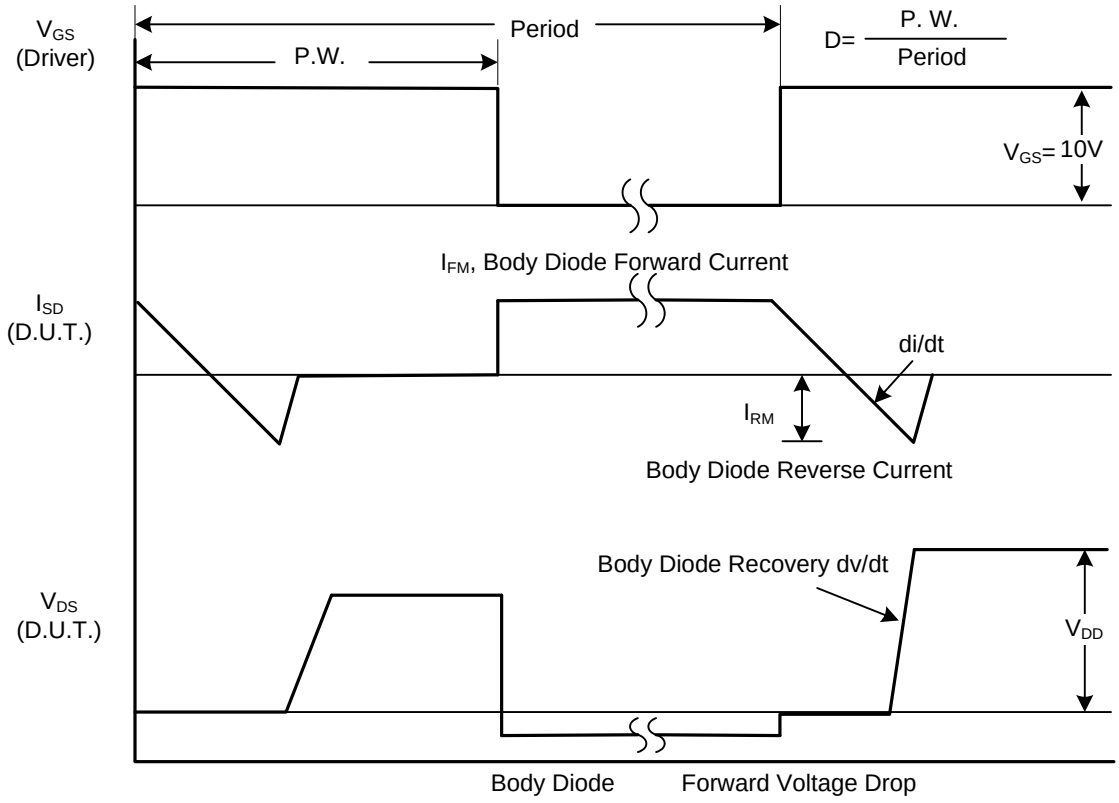

Fig. 1B Peak Diode Recovery dv/dt Waveforms

■ TEST CIRCUITS AND WAVEFORMS (Cont.)

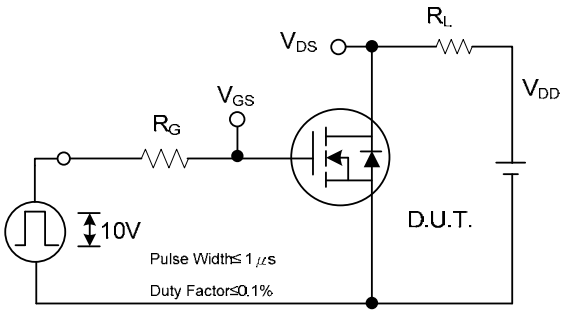

Fig. 2A Switching Test Circuit

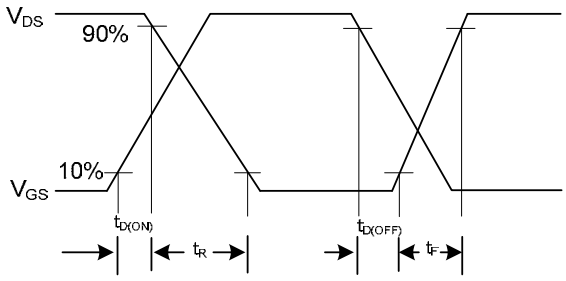

Fig. 2B Switching Waveforms

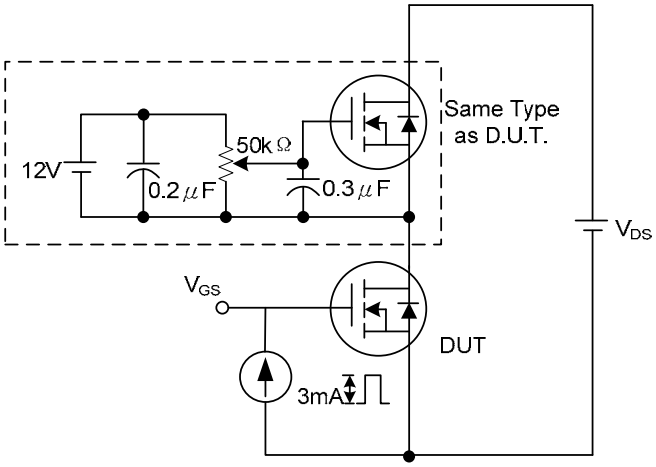

Fig. 3A Gate Charge Test Circuit

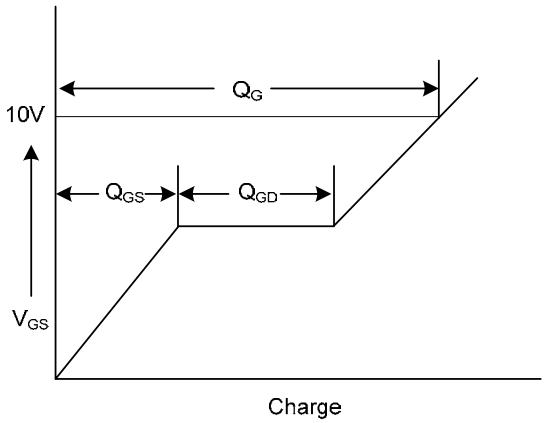

Fig. 3B Gate Charge Waveform

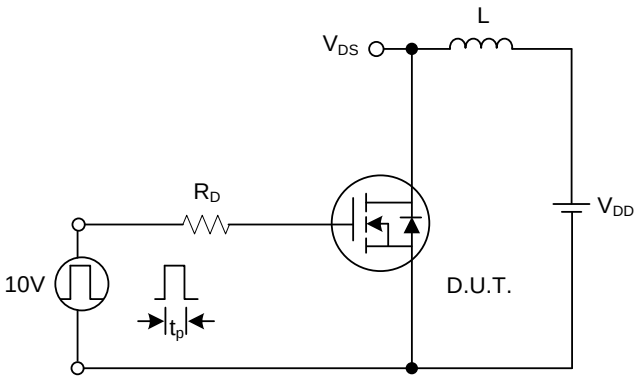

Fig. 4A Unclamped Inductive Switching Test Circuit

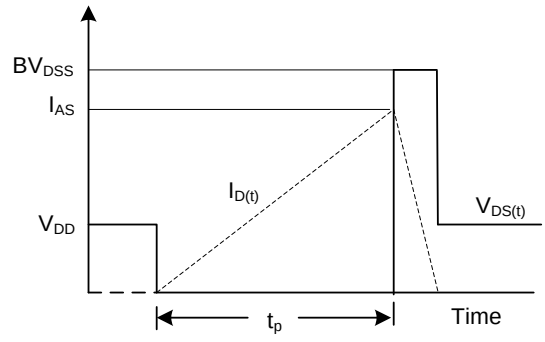

Fig. 4B Unclamped Inductive Switching Waveforms

■ TYPICAL CHARACTERISTICS

On-State Characteristics

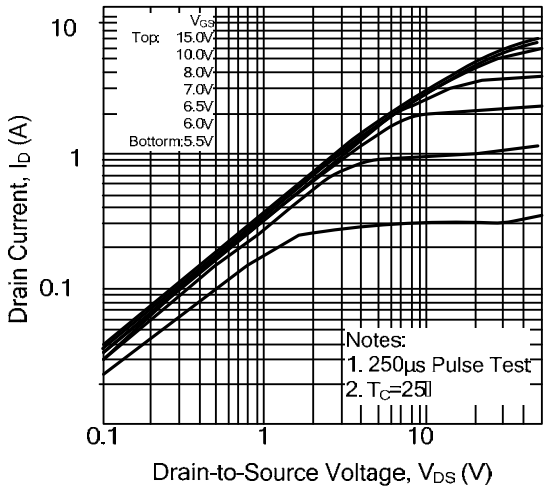

Transfer Characteristics

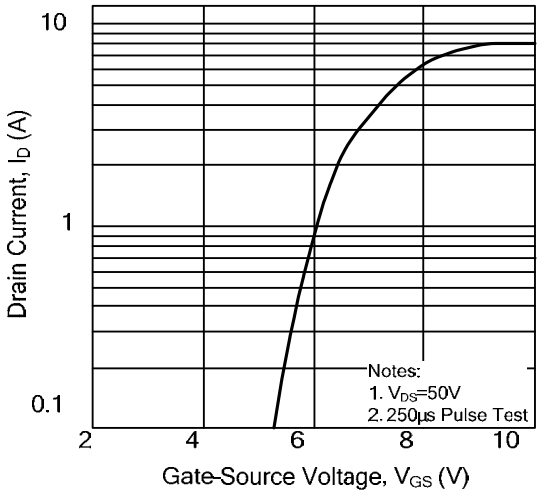

On-Resistance Variation vs.
Drain Current and Gate Voltage

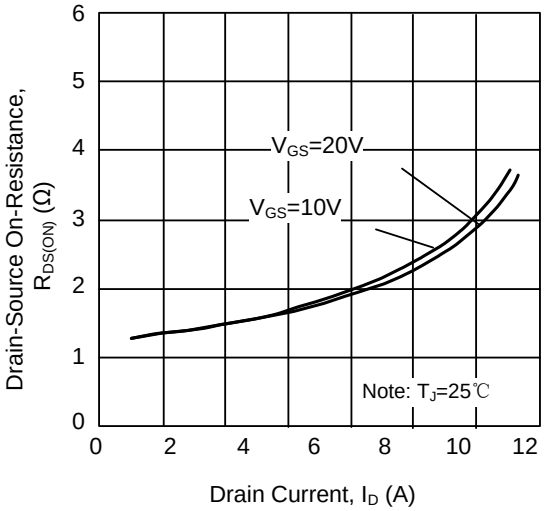

On State Current vs.
Allowable Case Temperature

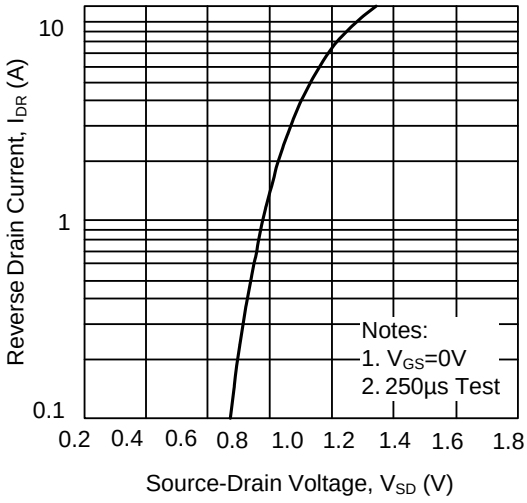

Capacitance Characteristics
(Non-Repetitive)

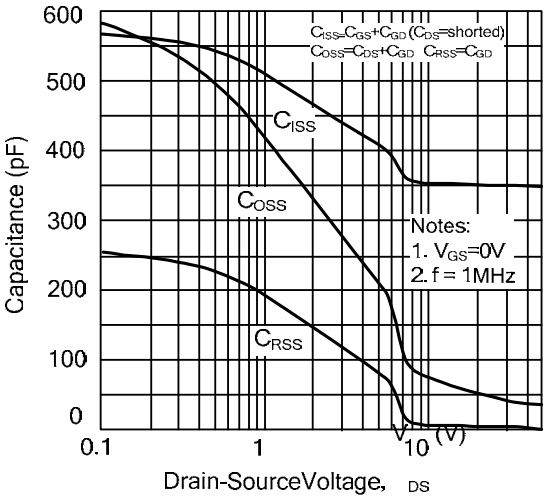

Gate Charge Characteristics

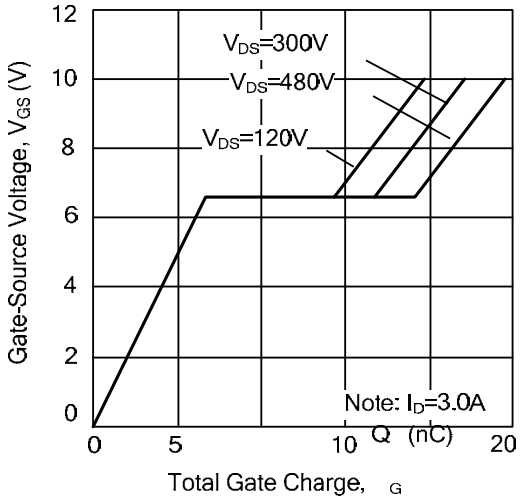

■ TYPICAL CHARACTERISTICS(Cont.)

Breakdown Voltage Variation vs. Junction Temperature

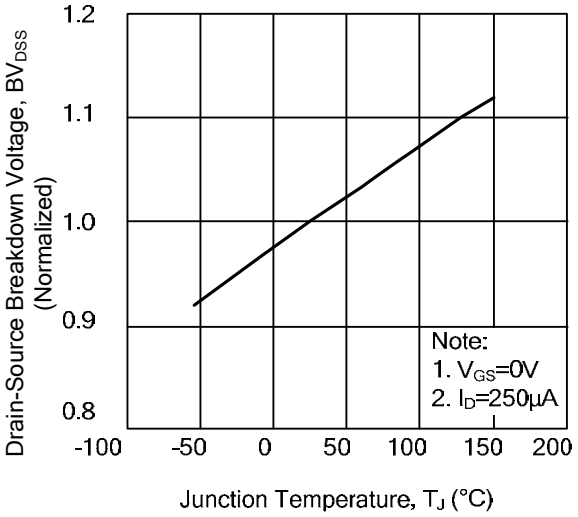

On-Resistance Variation vs. Junction Temperature

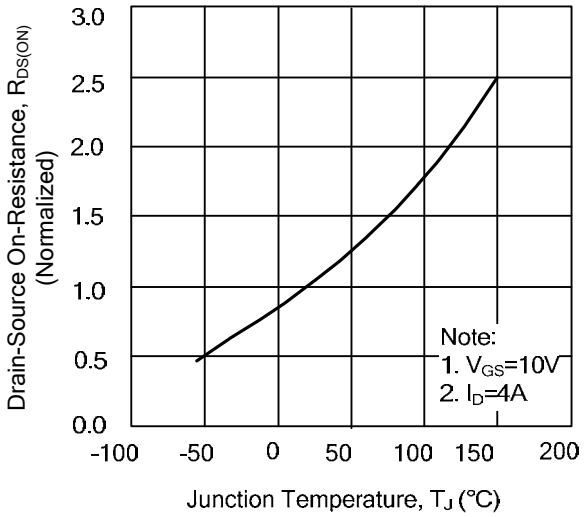

Transient Thermal Response Curve

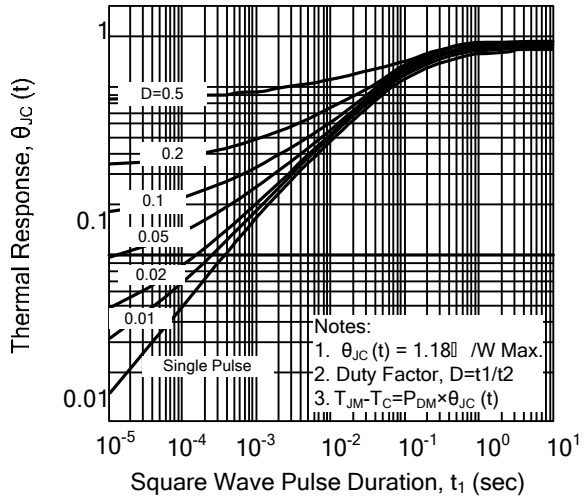

Maximum Drain Current vs. Case Temperature

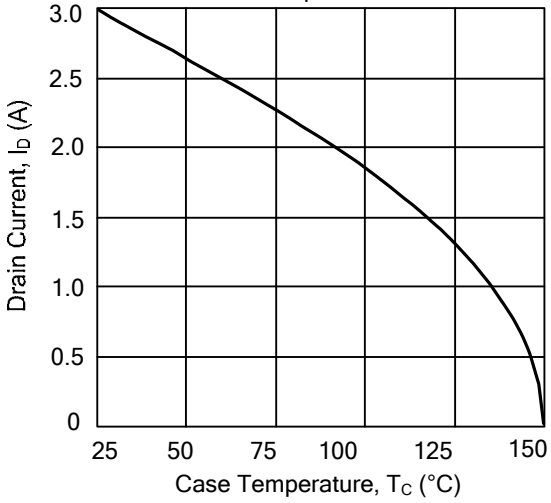

Safe Operating Area - 600V

