OMRON

Special-purpose PCB Relay | G5PA-1

New G5P-series Power Relay is Ideal for Power Supplies of TV Sets and Audio Systems

- Switches an inrush current of 78 A and a constant current of 5 A, thus meeting TV-5 requirements for TV and audio system use.
- Highly sensitive with a coil power consumption of 250 mW.
- Ensures a long endurance of 40,000 operations when switching an inrush current of 100 A.
- Incorporates environment-friendly contacts without cadmium.
- Equipped with a package of double-insulation construction ensuring high insulation performance.
- Models conforming to UL508, CSA C22.2, VDE0435/IEC255, and SEMKO are available.

Ordering Information

Classification	Contact form	Enclosure ratings	Model
Standard	SPST-NO	Flux protection	G5PA-1

Note: When ordering, add the rated coil voltage to the model number.
Example: G5PA-1 12 VDC
Rated coil voltage

Model Number Legend

G5PA-1 □ VDC
1 2

1. Number of Poles
1: 1 pole (SPST-NO)

2. Rated Coil Voltage
12, 24 VDC

Specifications

■ Coil Ratings

Rated voltage	12 VDC	24 VDC
Rated current	20.8 mA	10.4 mA
Coil resistance	576 Ω	2,304 Ω
Must operate voltage	80% of rated voltage max.	
Must release voltage	10% of rated voltage min.	
Max. permissible voltage	150% of rated voltage (at 23°C)	
Power consumption	Approx. 250 mW	

Note: **1.** Each rated current or coil resistance value must allow a tolerance of ±10% at a coil temperature of 23°C.
2. The operating characteristics are values at a coil temperature of 23°C.
3. The maximum permissible voltage is the maximum voltage that is applicable to the relay coil for an instant.

■ Contact Ratings

Rated load (capacitive load)	125 VAC with inrush current of 100 A (0 to peak) and constant current of 3 A (rms)
Resistive load (reference value)	5 A, 250 VAC; 5A, 30 VDC
Max. switching voltage	250 VAC, 30 VDC
Max. switching current	5 A

■ Characteristics

Contact resistance (see note 2)	100 mΩ max.
Operate time	15 ms max.
Release time	5 ms max.
Insulation resistance (see note 3)	1,000 MΩ min. (at 500 VDC)
Dielectric strength	4,000 VAC 50/60 Hz for 1 min between coil and contacts 1,000 VAC 50/60 Hz for 1 min between contacts of same polarity
Impulse withstand voltage	10,000 V (1.2 x 50 μs) between coil and contacts
Vibration resistance	Destruction: 10 to 55 to 10 Hz, 0.75-mm single amplitude (1.5-mm double amplitude) Malfunction: 10 to 55 to 10 Hz, 0.75-mm single amplitude (1.5-mm double amplitude)
Shock resistance	Destruction: 1,000 m/s^2 Malfunction: 200 m/s^2
Endurance	Mechanical: 1,000,000 operations min. (at 18,000 operations an hour) Electrical: 40,000 operations min. with a rated load at a 1,800 operations an hour. 80,000 operations min. with a resistive load (reference value)
Ambient temperature	Operating: −40°C to 70°C (with no icing)
Ambient humidity	Operating: 5% to 85%
Weight	Approx. 10 g

Note: **1.** The data shown above are initial values.
2. The contact resistance is possible with 1 A applied at 5 VDC using a fall-of-potential method.
3. The insulation resistance was measured at 500 VDC. There was no difference in measurement position between this item and the dielectric strength item.

■ Approved Standards

UL (File No. E41515, UL508)

CSA (File No. LR31928, C22.2 No. 14)

Model	Coil ratings	Contact ratings	Number of test operations
G5PA-1	5 to 24 VDC	5 A, 277 VAC	30,000
		5 A, 30 VDC	6,000
		TV-5 rating	25,000

SEMKO (Certificate No. 9732043; EN60065)

Model	Coil ratings	Contact ratings	Number of test operations
G5PA-1	5 to 28 VDC	5 A/40 A, 250 VAC 3 A/100 A, 250 VAC	10,000

TÜV (Certificate No. R9650435, IEC255/VDE0435)

Model	Coil ratings	Contact ratings	Number of test operations
G5PA-1	5 to 24 VDC	5 A, 250 VAC (cosϕ = 1) 5 A, 30 VDC (L/R: 0 ms)	100,000

Engineering Data

Maximum Switching Power

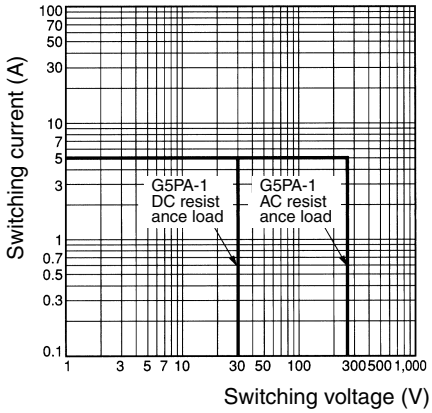

Ambient Temperatures vs. Maximum Coil Voltage

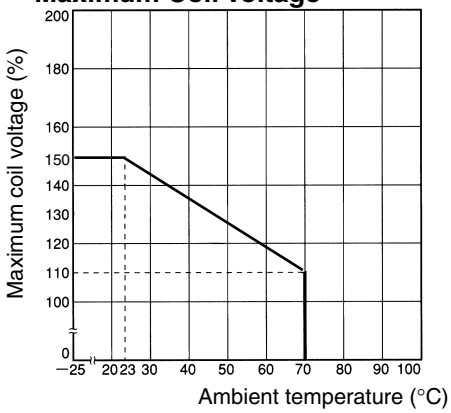

Note: The maximum coil voltage refers to the maximum value in a varying range of operating power voltage, not a continuous voltage.

Dimensions

Note: All units are in millimeters unless otherwise indicated.

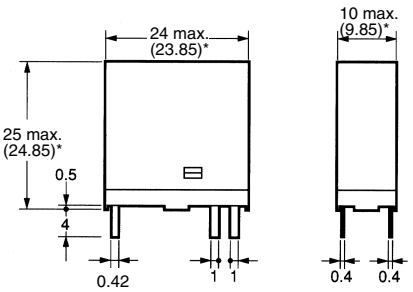

*Average value

Mounting Holes
(Bottom View)
Tolerance: ±0.1 mm.

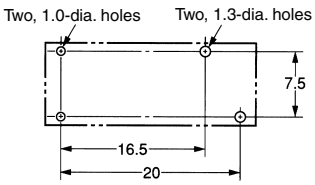

Terminal Arrangement /Internal Connections
(Bottom View)

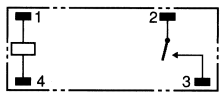

No coil polarity

ALL DIMENSIONS SHOWN ARE IN MILLIMETERS.
To convert millimeters into inches, multiply by 0.03937. To convert grams into ounces, multiply by 0.03527.

Cat. No. J113-E1-2A