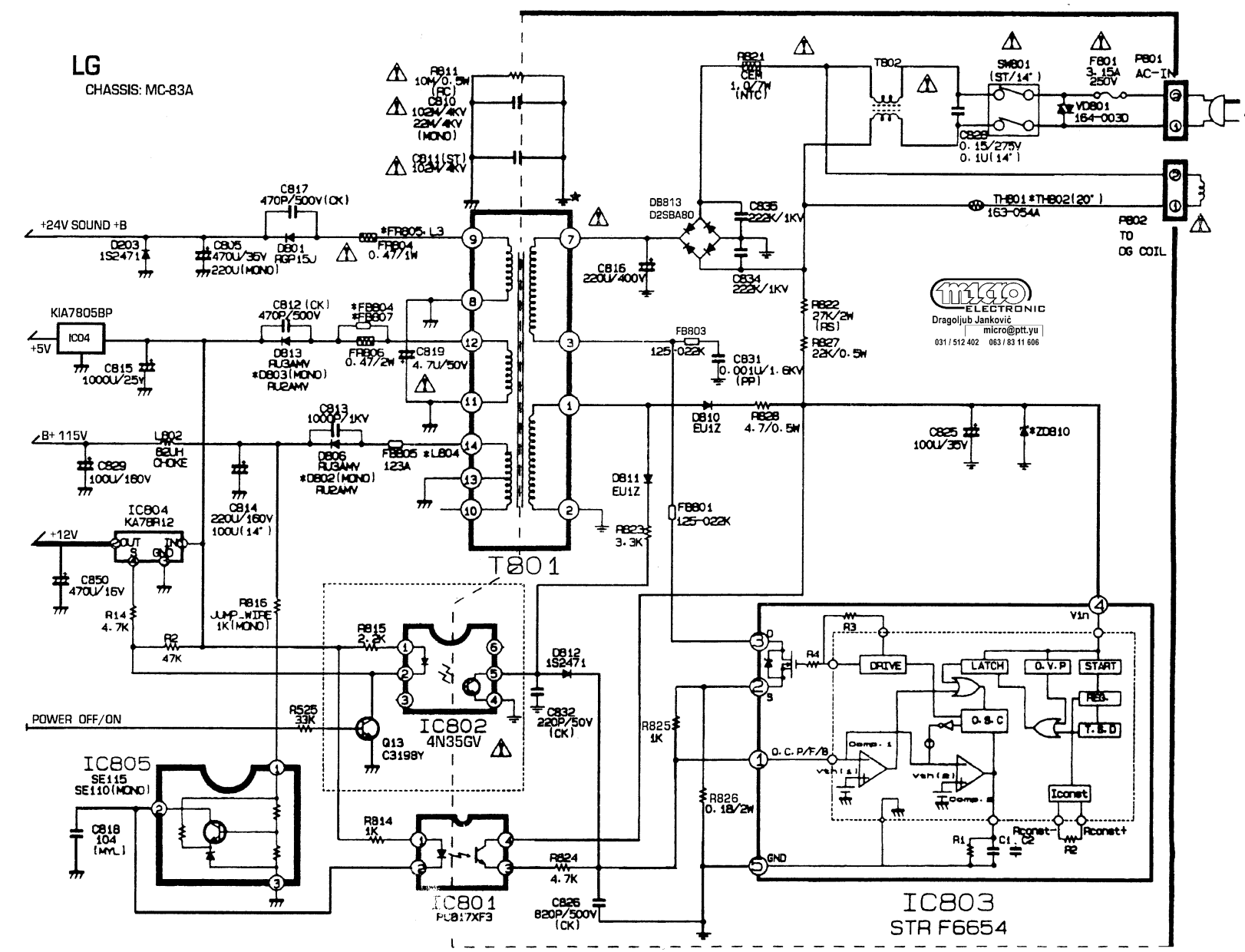
LG
CHASSIS: MC-83A
R811 10M/0.5W (RC)
C810 102M/4KV 22M/4KV (MONO)
C811(ST) 102M/4KV
C817 470P/500V(CK)
+24V SOUND +B
D203 1S2471
C805 470U/35V 220U(MONO)
D801 RGP15J
*FB805 L3
FB804 0.47/1W
KIA7805BP
IC04
+5V
C815 1000U/25V
C812 (CK) 470P/500V
D813 RU3AMV
*D803(MONO) RU2AMV
*FB804 *FB807
FB806 0.47/2W
C819 4.7U/50V
C813 1000P/1KV
D806 RU3AMV
*D802(MONO) RU2AMV
FB805 123A
*L804
B+ 115V
L802 82UH CHOKE
C829 100U/160V
C814 220U/160V 100U(14")
IC804 KA78R12
+12V
OUT IN GND
C850 470U/16V
R14 4.7K
R2 47K
R816 JUMP_WIRE 1K(MONO)
R815 2.2K
POWER OFF/ON
R525 33K
Q13 C3198Y
IC802 4N35GV
D812 1S2471
C832 220P/50V (CK)
IC805 SE115 SE110(MONO)
C818 104 (MYL)
R814 1K
IC801 PC817XF3
R824 4.7K
C826 820P/500V (CK)
T801
DB813 D2SBA80
C816 220U/400V
C836 222K/1KV
C834 222K/1KV
FB803 125-022K
C831 0.001U/1.6KV (PP)
D810 EU1Z
R828 4.7/0.5W
D811 EU1Z
FB801 125-022K
R823 3.3K
R825 1K
R826 0.18/2W
R821 CER 1.0/7W (NTC)
R822 27K/2W (RS)
R827 22K/0.5W
TB02
SW801 (ST/14")
C828 0.15/275V 0.1U(14")
F801 3.15A 250V
VD801 164-0030
PB01 AC-IN
TH801*TH802(20") 163-054A
PB02 TO OG COIL
C825 100U/35V
ZD810
micro ELECTRONIC
Dragoljub Janković
micro@ptt.yu
031 / 512 402 063 / 83 11 606
Vin
R3
R4
DRIVE
LATCH
O.V.P
START
REG.
O.S.C
T.S.D
Comp. 1
Comp. 2
Iconst
Rconst-
Rconst+
R1
C1, C2
R2
O.C.P/F/B
GND
IC803
STR F6654

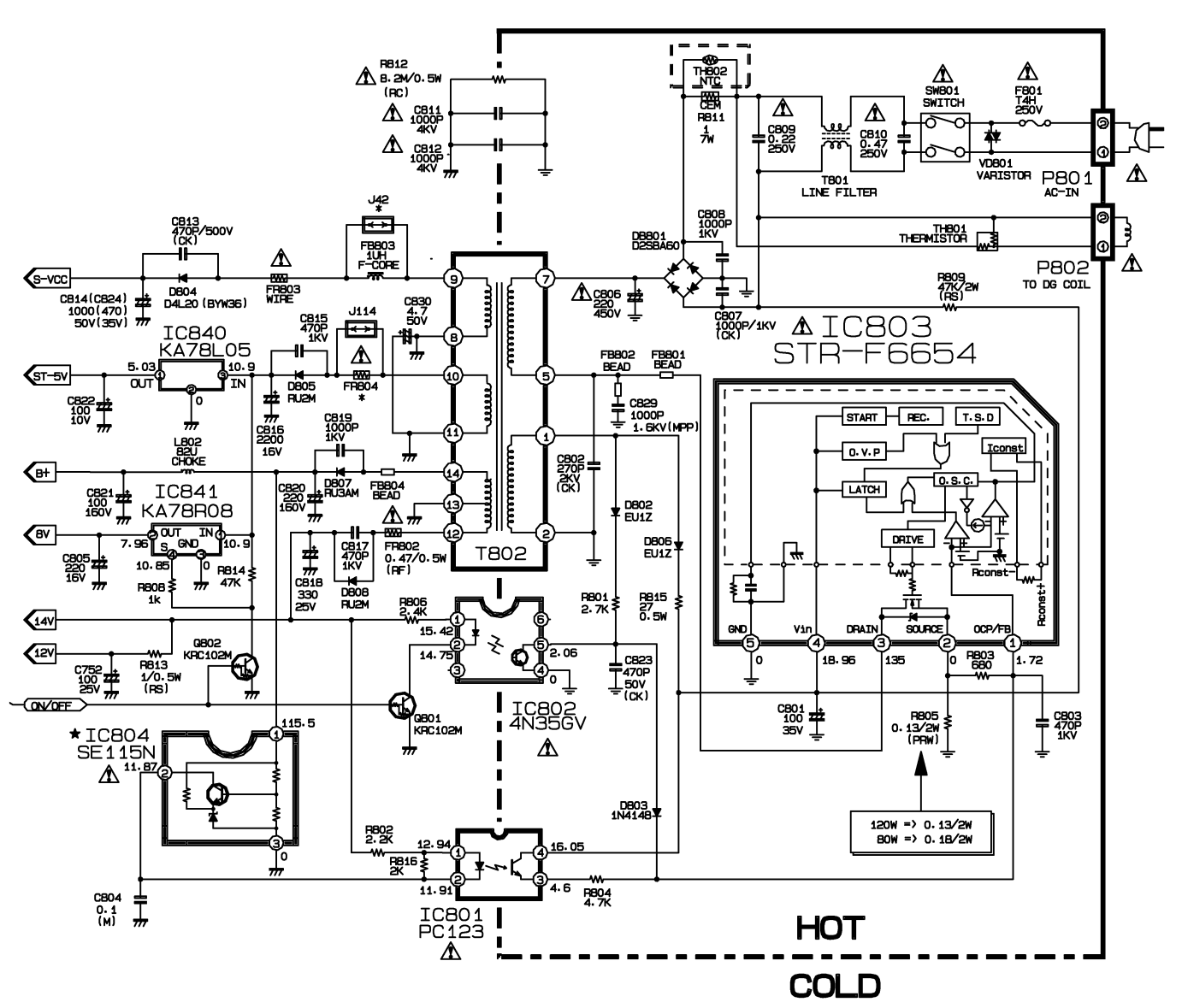
R812
8.2M/0.5W
(RC)
C811
1000P
4KV
C812
1000P
4KV
TH802
NTC
C5M
R811
1
7W
C809
0.22
250V
C810
0.47
250V
T801
LINE FILTER
SW801
SWITCH
F801
T4H
250V
VD801
VARISTOR
P801
AC-IN
TH801
THERMISTOR
P802
TO DG COIL
C813
470P/500V
(CK)
J42
*
FB803
1UH
F-CORE
C808
1000P
1KV
DB801
D2SBA60
S-VCC
C814(C824)
1000(470)
50V(35V)
D804
D4L20 (BYW36)
FB803
WIRE
C830
4.7
50V
C806
220
450V
R809
47K/2W
(RS)
C807
1000P/1KV
(CK)
IC803
STR-F6654
IC840
KA78L05
5.03
OUT
IN
10.9
0
ST-5V
C822
100
10V
C815
470P
1KV
J114
D805
RU2M
FR804
*
FB802
BEAD
FB801
BEAD
C829
1000P
1.5KV(MPP)
C816
2200
16V
C819
1000P
1KV
L802
82U
CHOKE
B+
C821
100
160V
IC841
KA78R08
C820
220
160V
D807
RU3AM
FB804
BEAD
C802
270P
2KV
(CK)
D802
EU1Z
D806
EU1Z
8V
7.96
OUT
IN
GND
10.9
10.85
0
C805
220
16V
C817
470P
1KV
FB802
0.47/0.5W
(RF)
T802
R814
47K
R808
1k
C818
330
25V
D808
RU2M
R806
2.4K
R801
2.7K
R815
27
0.5W
START
REC.
T.S.D
O.V.P
Iconst
LATCH
O.S.C.
DRIVE
Rconst
Rconst1
14V
15.42
14.75
2.06
0
C823
470P
50V
(CK)
12V
C752
100
25V
R813
1/0.5W
(RS)
Q802
KRC102M
GND
Vin
DRAIN
SOURCE
OCP/FB
0
18.96
135
0
1.72
R803
680
ON/OFF
Q801
KRC102M
IC802
4N35GV
C801
100
35V
R805
0.13/2W
(PRW)
C803
470P
1KV
★IC804
SE115N
115.5
11.87
0
D803
1N4148
120W => 0.13/2W
80W => 0.18/2W
R802
2.2K
12.94
16.05
R816
2K
11.91
4.6
R804
4.7K
C804
0.1
(M)
IC801
PC123
HOT
COLD